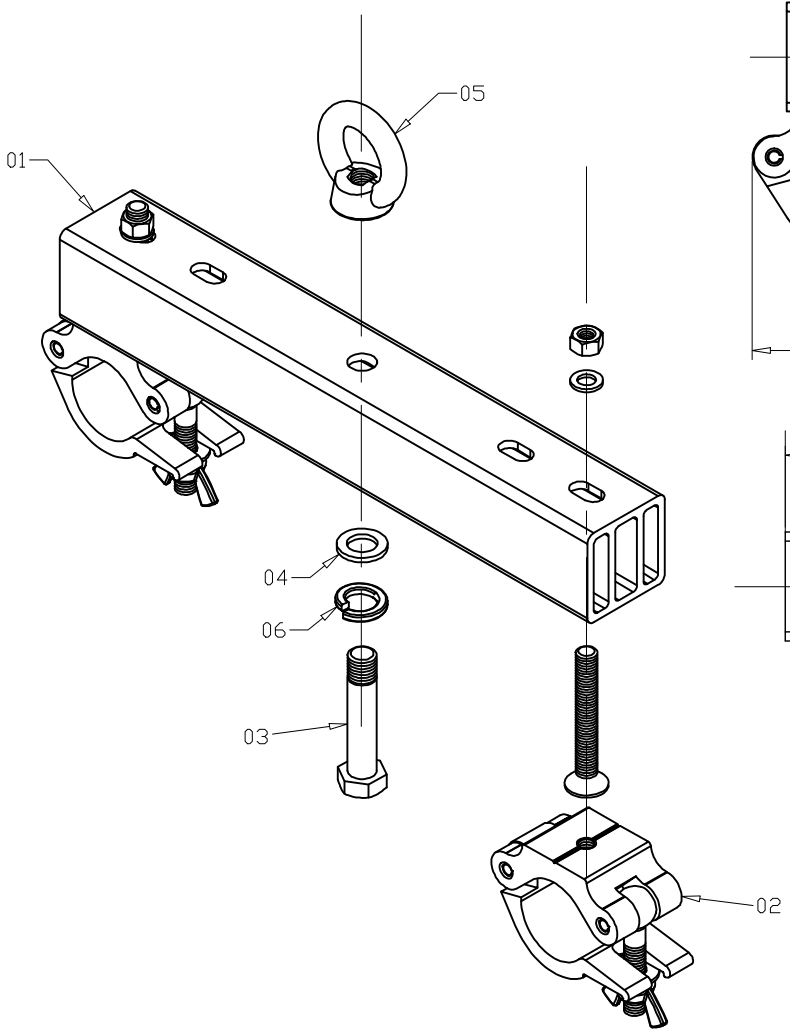

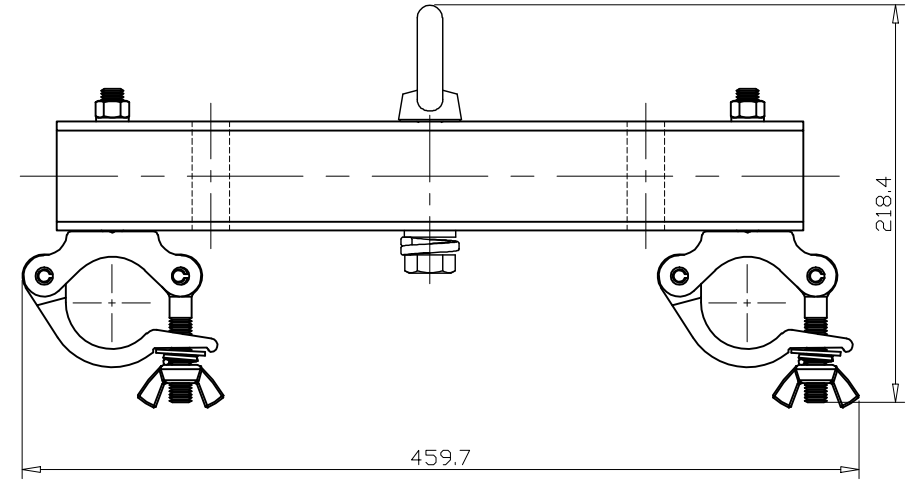

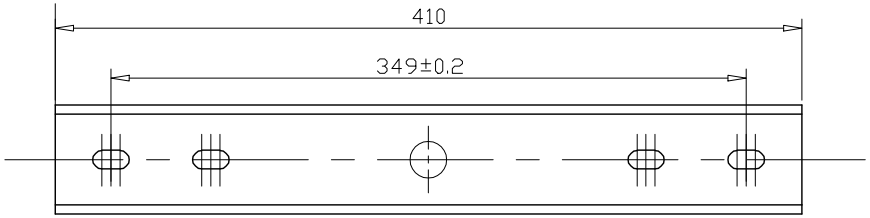

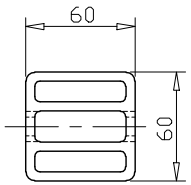

NO.	SPEC.	MATERIAL	FIN.	QTY.
06	ø20.7*ø29*4.1t	Steel	ZP	1
05	M20*2.5P(1.2Ton)	Steel	ZP	1
04	ø21*ø37*3.0t	Steel	ZP	1
03	M20*2.5P*80mm	Steel	black	1
02	ST823(90mm)	Steel	ZP	2
01	WT-5057-410	#6082	T6	1

DRAWN	***	DRAW NO	PJ-LJZ034A		2D/3D	edition	1
Specification	***	DESIGN	HUANGYUWEI	DATE 13.08.08	CHECKED	APPROVED	
Weight	**kgs/pcs	UNITS	mm	Proofread			
SURFACE	RAW	SCALE	1:4				

MARK	NAME	RETRIEVE CONTENTS	DATE

Global Truss